FIVE WAY AIR OPERATED VALVE

M04 / M14 M05 / M15

GENERAL DESCRIPTION / APPLICATIONS / DIMENSIONS (mm)

Five way, two positions, air operated valve.

Suitable for gaseous media. Model for liquid media available upon request.

Stainless steel internal parts. Stainless steel spring.

Stainless steel internal parts.

Stainless steel springs.

Mountable in any position.

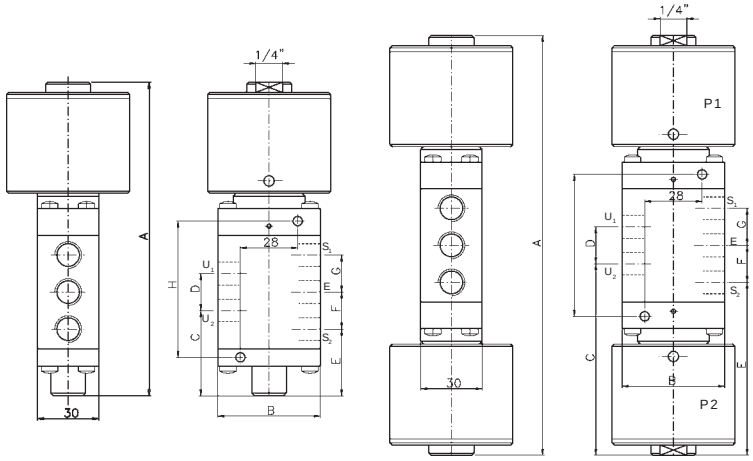

PNEUMATIC ACTUATOR INFORMATIONS

Simple effect direct acting actuator with spring return

Brass or nickel-plated brass actuator body.

Actuator piston seal material: NBR (Buna N)

Min. operating pressures: 2 bar

Max. operating pressure: 10 bar.

OPERATION

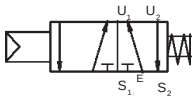

M04/M14 - Single actuator Monostable

In:	E
At rest:	from E to U1. from U2 to S2.
Air in P:	from E to U2. from U1 to S1.

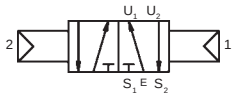

M05/m15 - Double actuator Bistable

In:	E
Air in P1:	from E to U1. from U2 to S2.
Air in P2:	from E to U2 from U1 to S1
At rest:	Latched on the last position.

SPECIFICATIONS AND DIMENSIONS

MODELLO							ORIFICE DIAMETER mm	PRESSURE IN BAR			COEFF. kv (l./min)	DIMENSIONS (millimeters)								
								NOMINAL MAX.	DIFFERENTIAL											
	a		b	c					MIN.	MAX.		A	B	C	D	E	F	G	H	Weight Kg.
M 0 4		7 0	C D				7	10	0	10	12,5	115	50	42	18	33	18	18	67	1,5
M 1 4		1 1	E T				11	10	0	10	30	183	60	51	30	36	30	30	97	2,2
M 1 4		1 1	F G				11	10	0	10	30	183	60	51	30	36	30	30	97	2,2
M 0 5		7 0	F G				7	10	0	10	12,5	204	50	42	18	84	18	18	69	1,8
M 1 5		1 1	E T				11	10	0	10	30	234	60	51	30	87	30	30	99	2,5
M 1 5		1 1	F G				11	10	0	10	30	234	60	51	30	87	30	30	99	2,5

a Body material	b Port size		c Seals material
T Brass.	C 1/4" GAS	D 1/4" NPT	0 Buna N
N Nickel-plated brass.	E 3/8" GAS	T 3/8" NPT	1 FPM
I Stainless steel.	F 1/2" GAS	G 1/2" NPT	7 HNBR

Rev. W1- EN 05/2004 - "Nadi srl" company reserved the right to carry out technical and aesthetic modifications without prior notification. Ask or chek for new revisions on www.nadi.it.

Nadi srl - Via Risorgimento 10 - 20017 Mazzo di RHO (MI) - Italy Tel. +39 02 93900686 - Fax +39 02 93900714 - Internet: www.nadi.it e-mail: nadi@nadi.it